NOTES:

1. BASE TO BE PLACED ON A WELL COMPACTED FOUNDATION.
2. FRAME AND COVER SHALL BE TESTED FOR ACCURACY OF FIT AND SHALL BE MARKED IN SETS FOR DELIVERY.
3. FRAME AND COVER SHALL BE CAST IRON AND HAVE COATING APPLIED TO ALL FACES.
4. CASTINGS IN RIGID PAVEMENT SHALL HAVE REINFORCING STEEL IN THE PAVEMENT.

RISER RING DIMENSIONS			
A (SIZE)	1½"	2"	3"

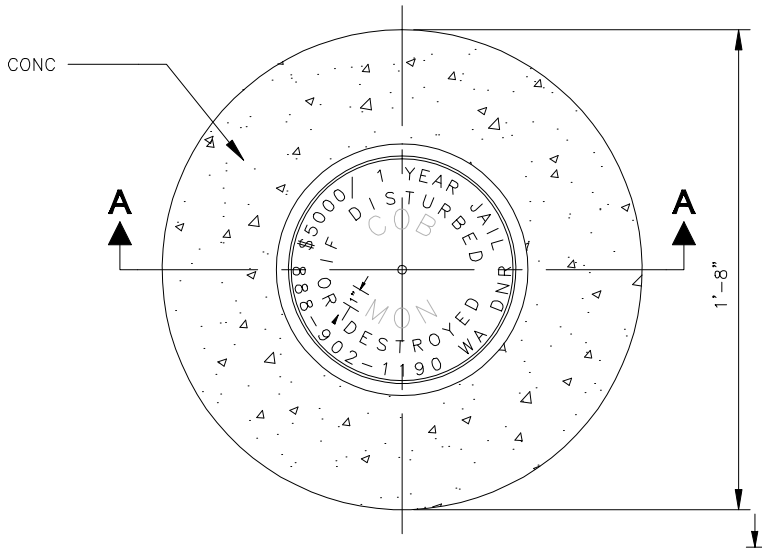

PLAN

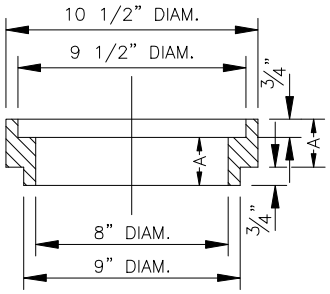

SECTION
RISER RING

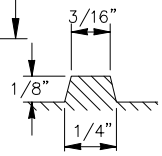

SECTION OF LETTER

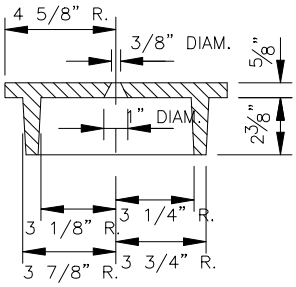

SECTION
COVER

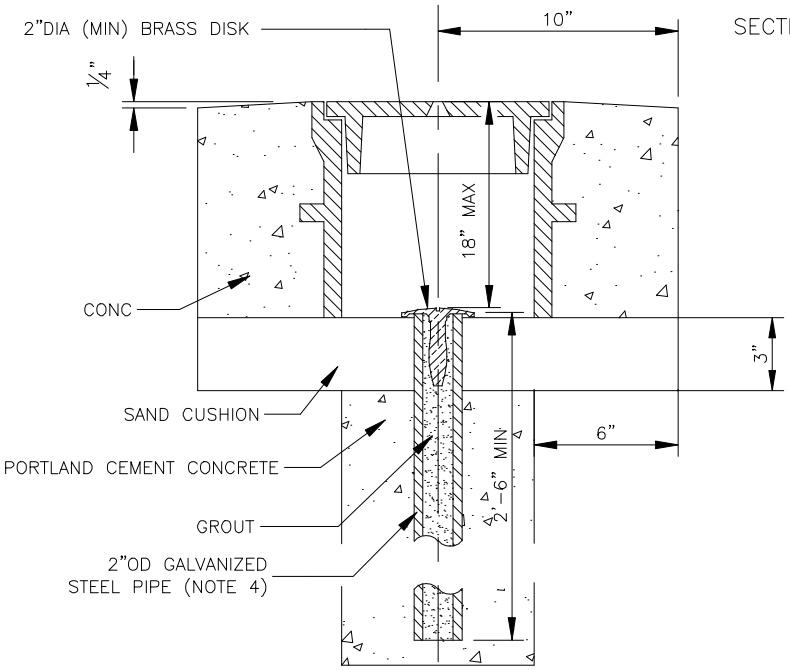

SECTION A–A

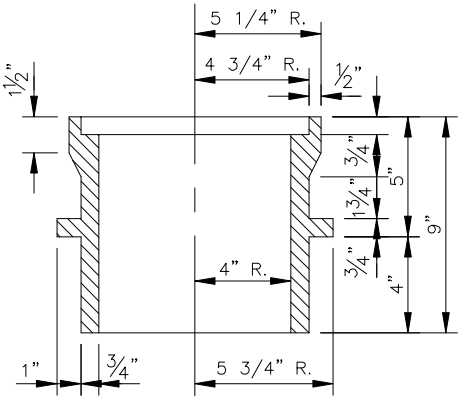

SECTION
CASE

City of Bremerton

PUBLIC WORKS

ENGINEERING DIVISION

MONUMENT, FRAME & COVER AND INSTALLATION

Alteration of this drawing is prohibited. Any approval of an altered drawing is unauthorized and void.

3401

Revision Date
03/25/14